Element™ Magnetic Glass Dry-Erase Boards

Quartet®

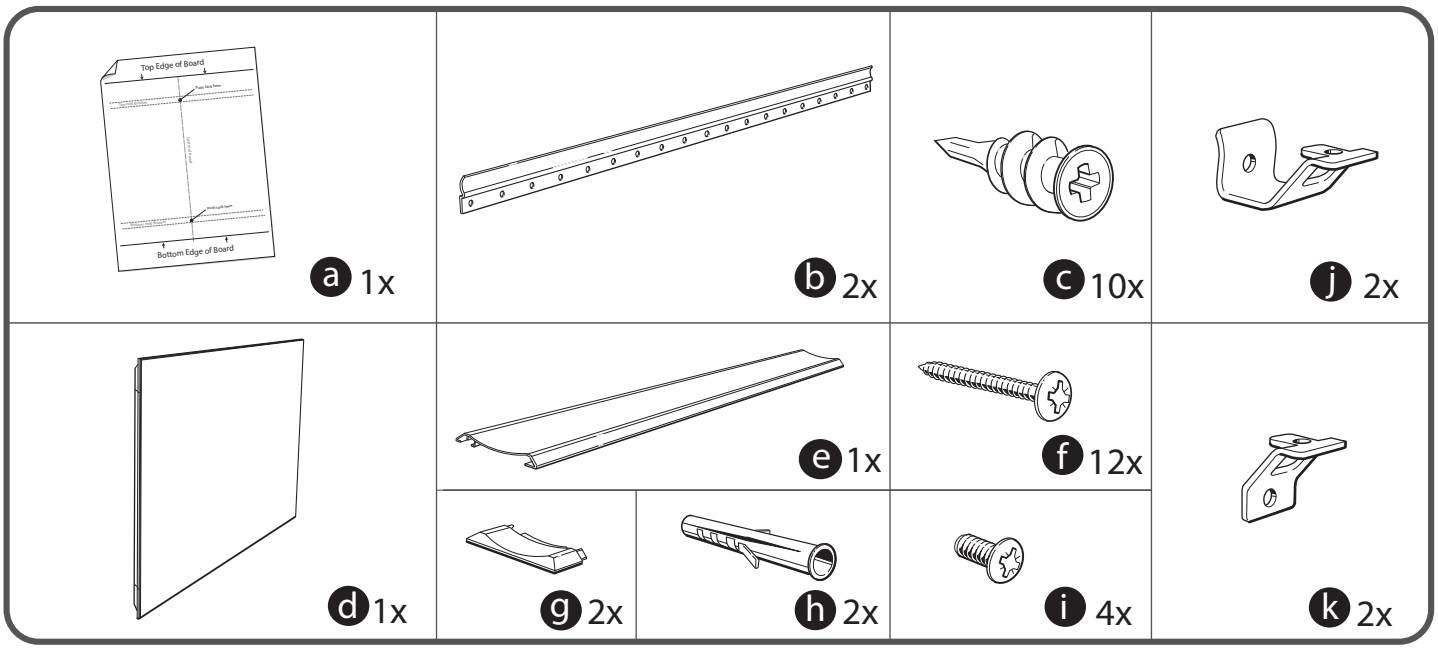

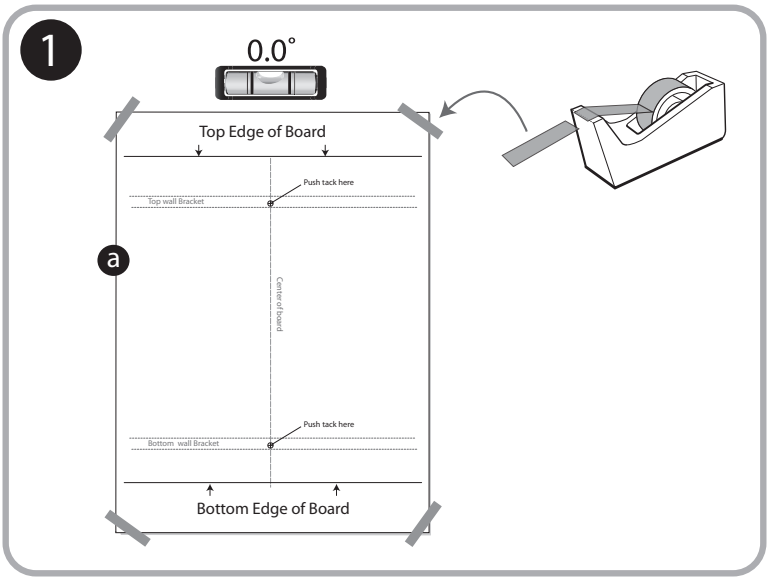

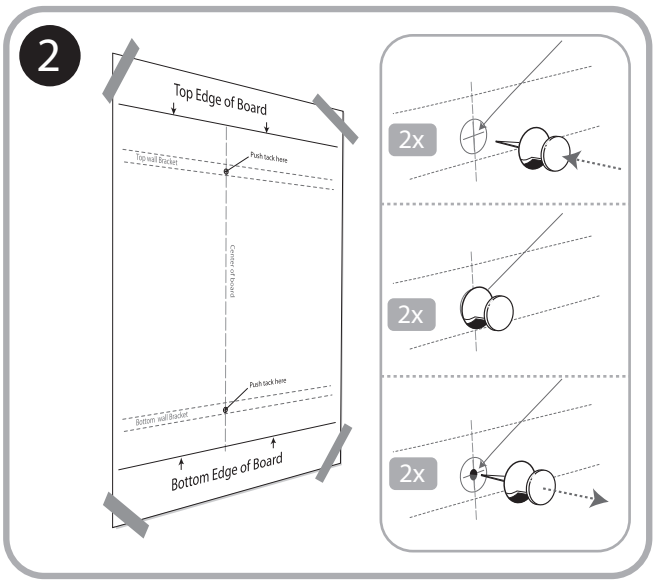

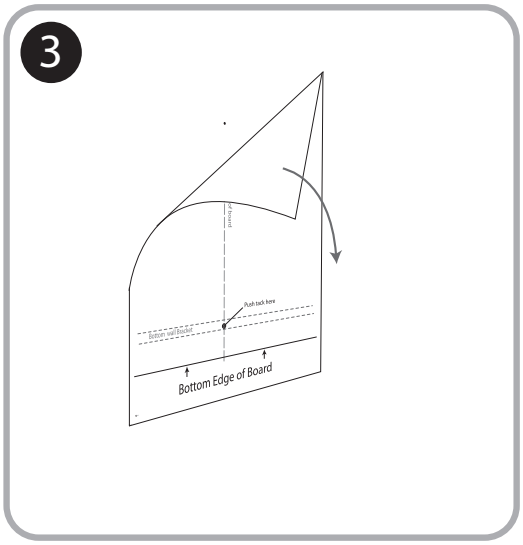

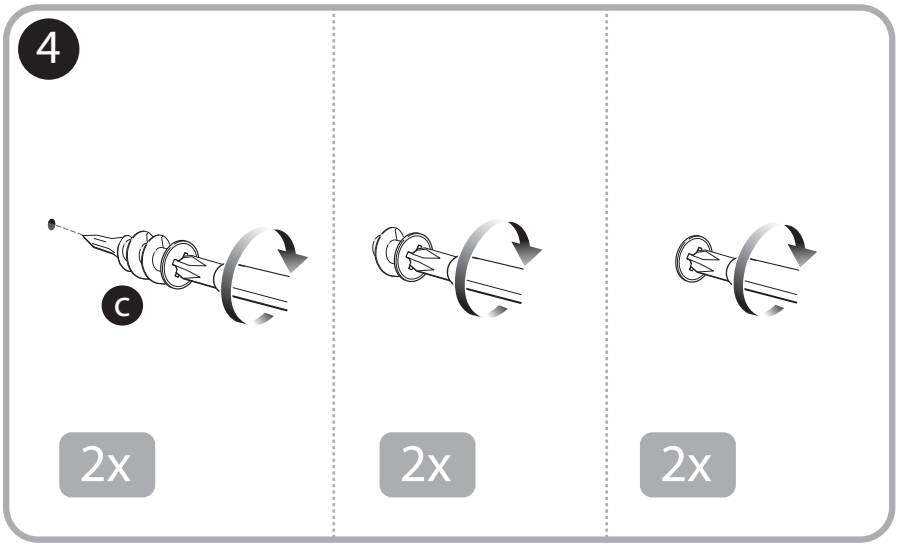

ACCO Brands (Returns Center)
101 Bolton Ave 9E
Booneville, MS 38829 USA
Tel: 800-541-0094
www.acco.com
www.quartet.com

*for older or hard wallboard, a 7/32" pilot hole can be drilled first for easier anchor installation

Element™ Magnetic Glass Dry-Erase Boards

Quartet®

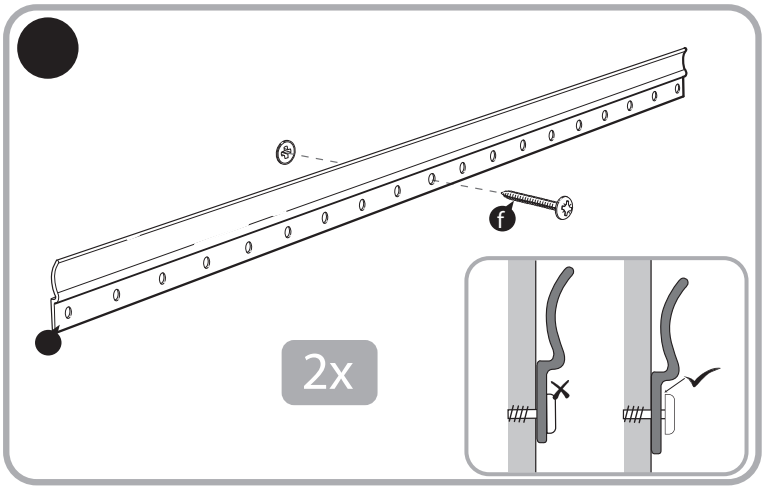

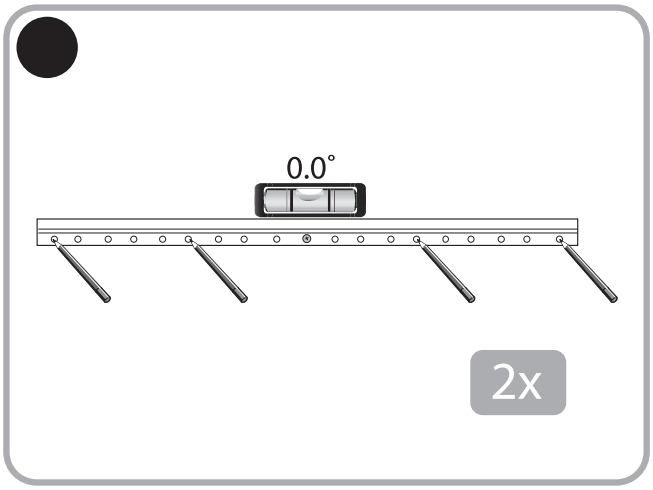

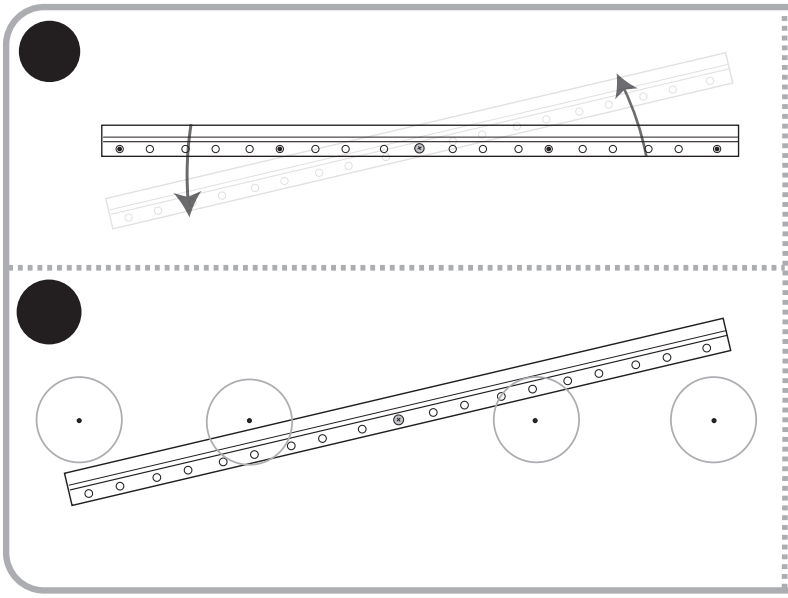

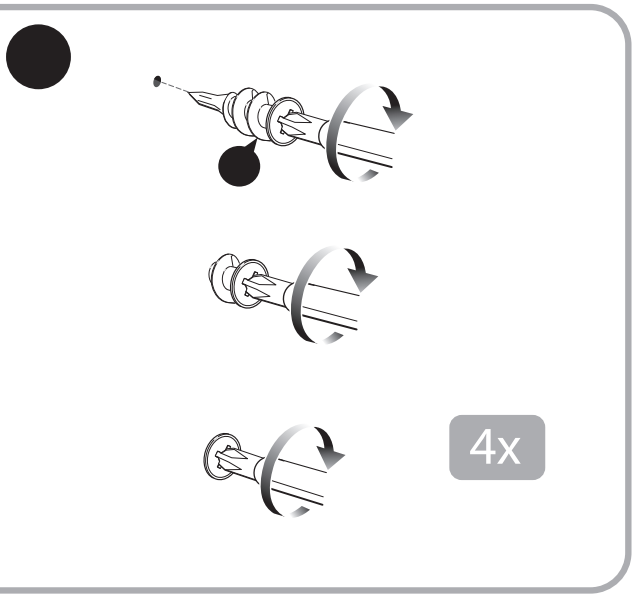

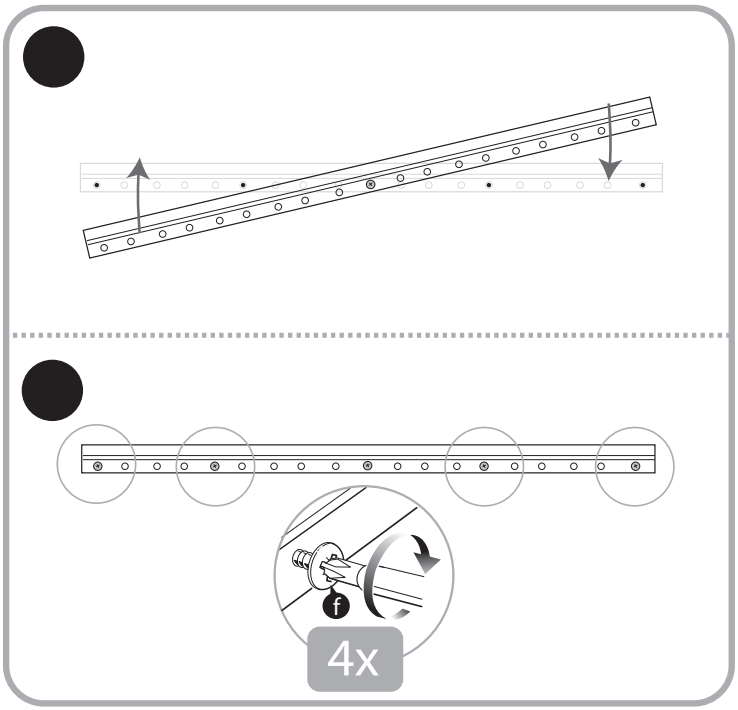

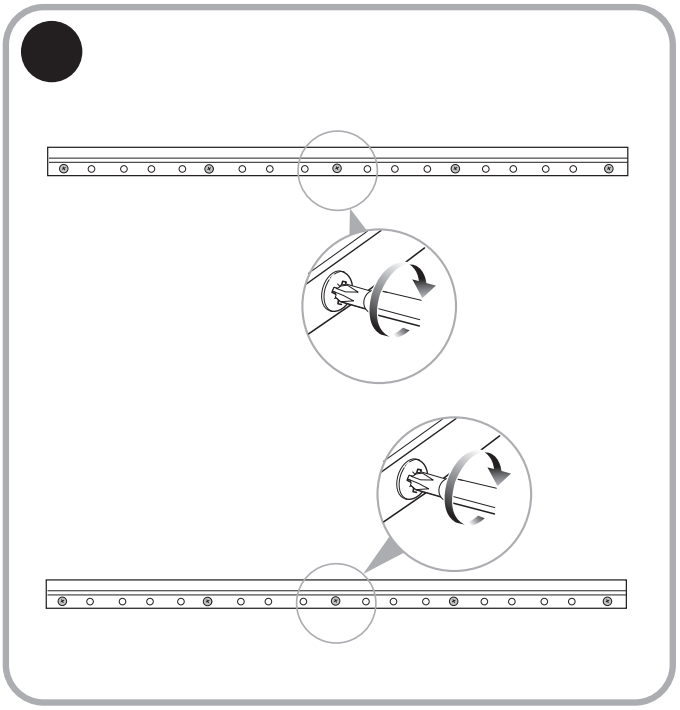

ACCO Brands (Returns Center)
101 Bolton Ave 9E
Booneville, MS 38829 USA
Tel: 800-541-0094
www.acco.com
www.quartet.com

Element™ Magnetic Glass Dry-Erase Boards

Quartet®

13

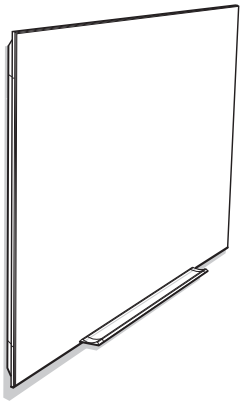

14

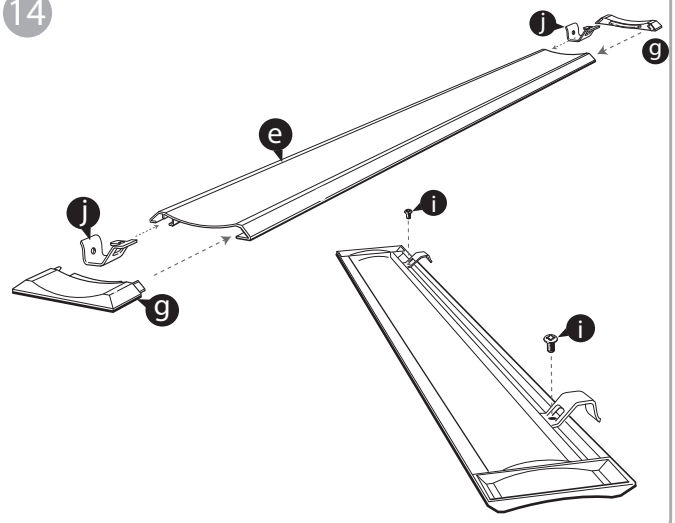

15

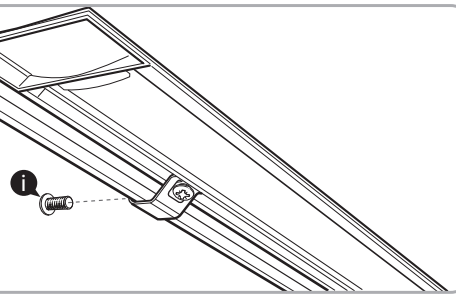

16

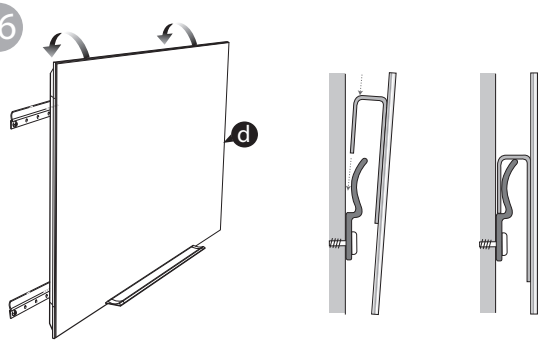

13

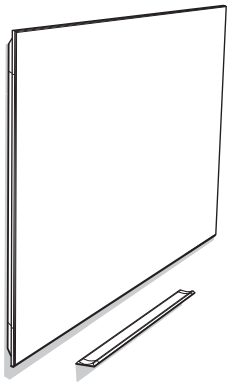

14

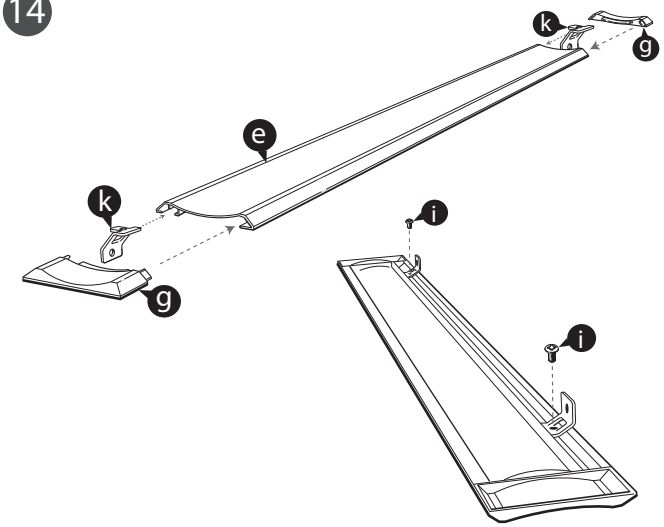

15

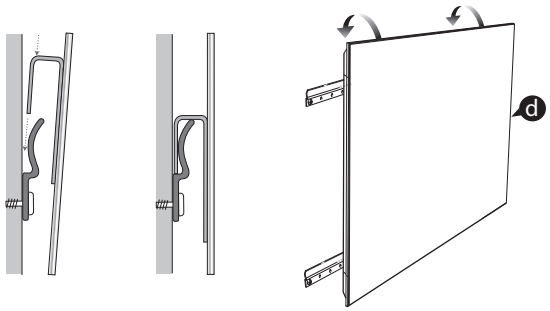

16

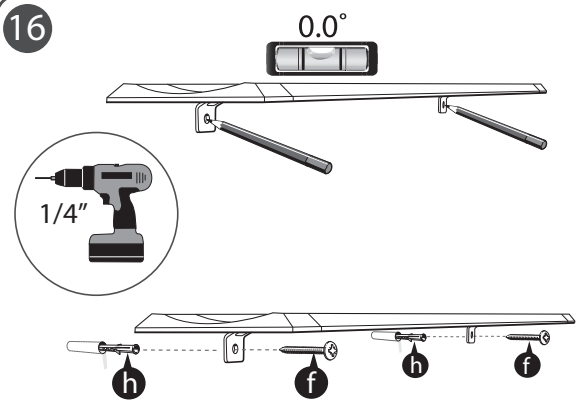

ACCO Brands (Returns Center)
101 Bolton Ave 9E
Booneville, MS 38829 USA
Tel: 800-541-0094

www.acco.com
www.quartet.com