Invisible Mount Glass Boards

quartet

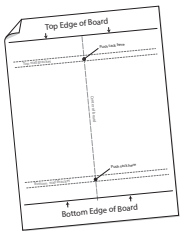

a 1x

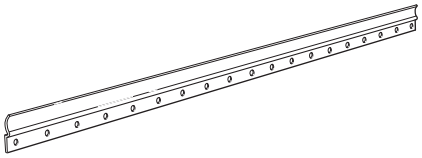

b 2x

c 10x

d 10x

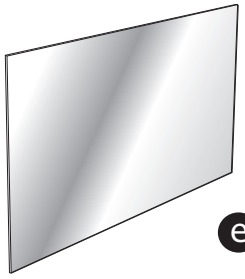

e 1x

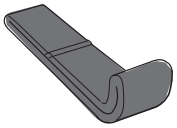

f 2x

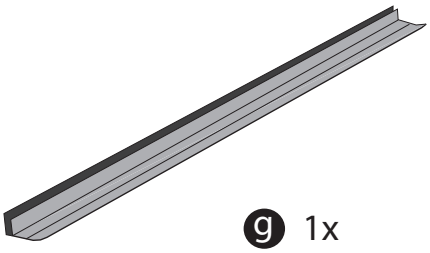

g 1x

1

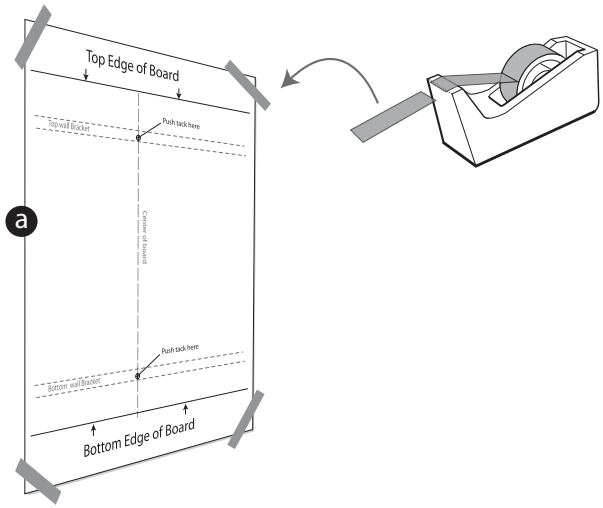

2

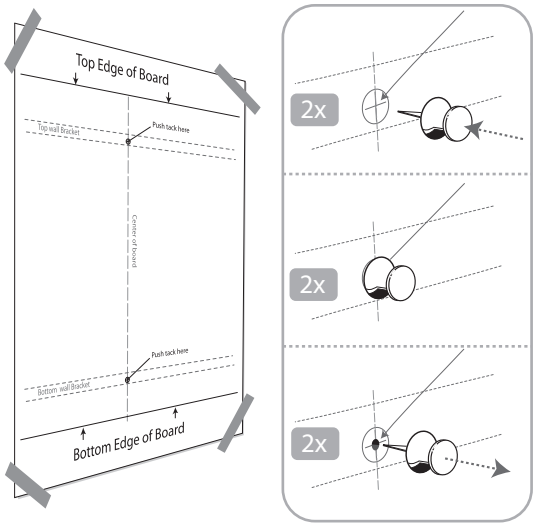

3

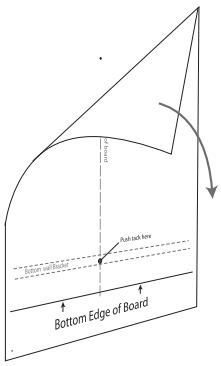

4

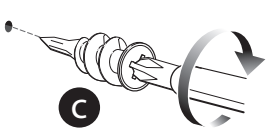

2x

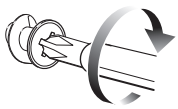

2x

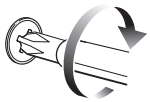

2x

ACCO Brands (Returns Center)
101 Bolton Ave 9E
Booneville, MS 38829 USA
Tel: 800-541-0094
www.acco.com
www.quartet.com

Invisible Mount Glass Boards

quartet

5

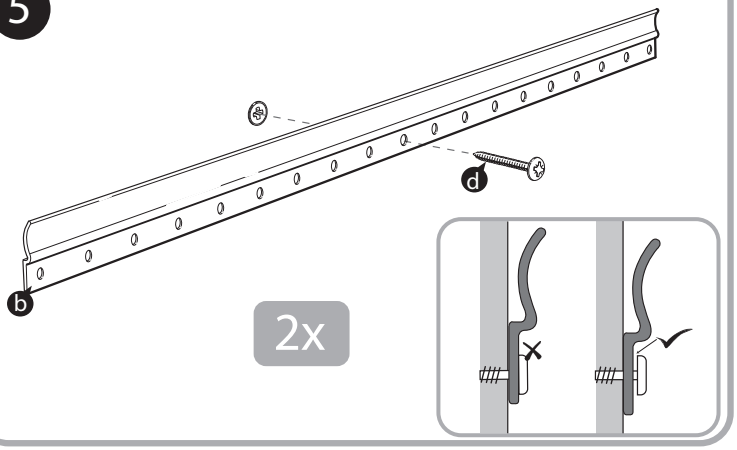

6

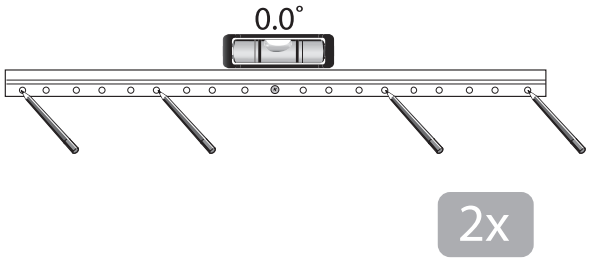

7

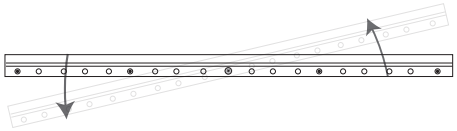

8

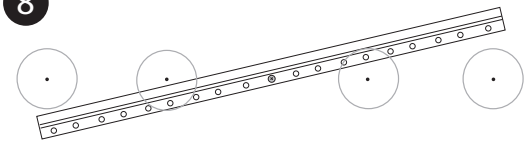

9

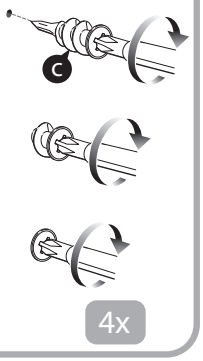

10

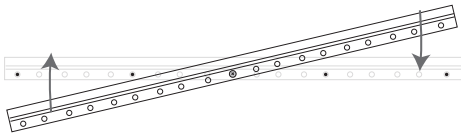

11

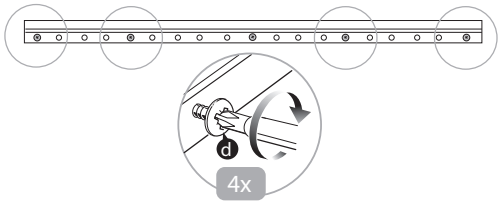

12

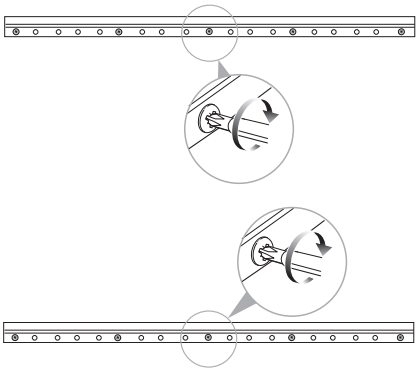

13

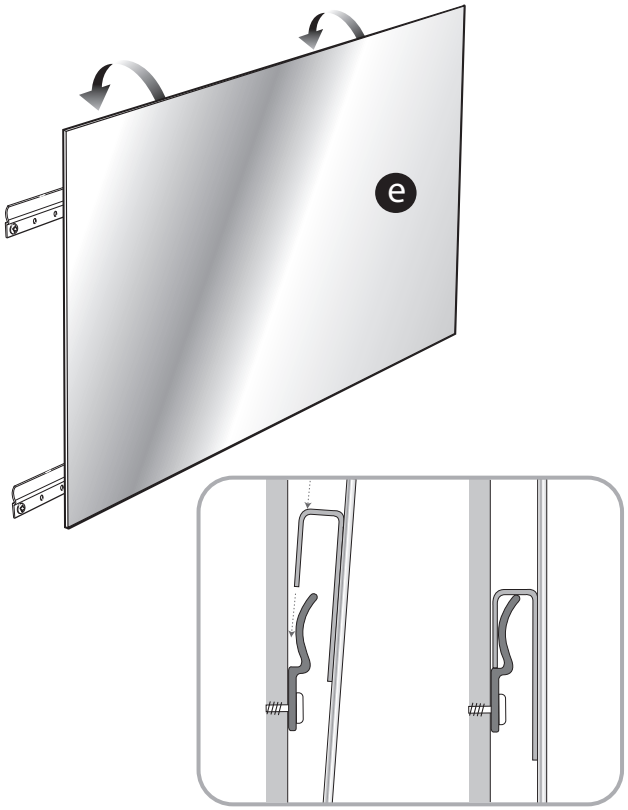

14

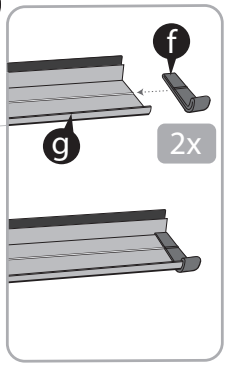

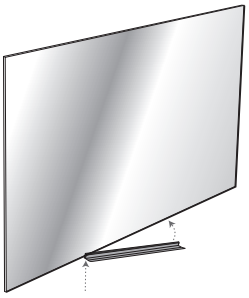

ACCO Brands (Returns Center)
101 Bolton Ave 9E
Booneville, MS 38829 USA
Tel: 800-541-0094

www.acco.com
www.quartet.com